Control unit

Control unit

File: control.kicad_sch

Video unit

Video unit

File: video.kicad_sch

Address unit

Address unit

File: address.kicad_sch

Power supply and headers

Power and headers

File: power.kicad_sch

ALU

ALU

File: alu.kicad_sch

Data and flags

Data and flags

File: reg_flags.kicad_sch

Sheet: /
File: Isetta.kicad_sch

Title: Isetta TTL computer

Size: A4	Date: 2023-12-04	Rev:
KiCad E.D.A. kicad 7.0.2		Id: 1/7

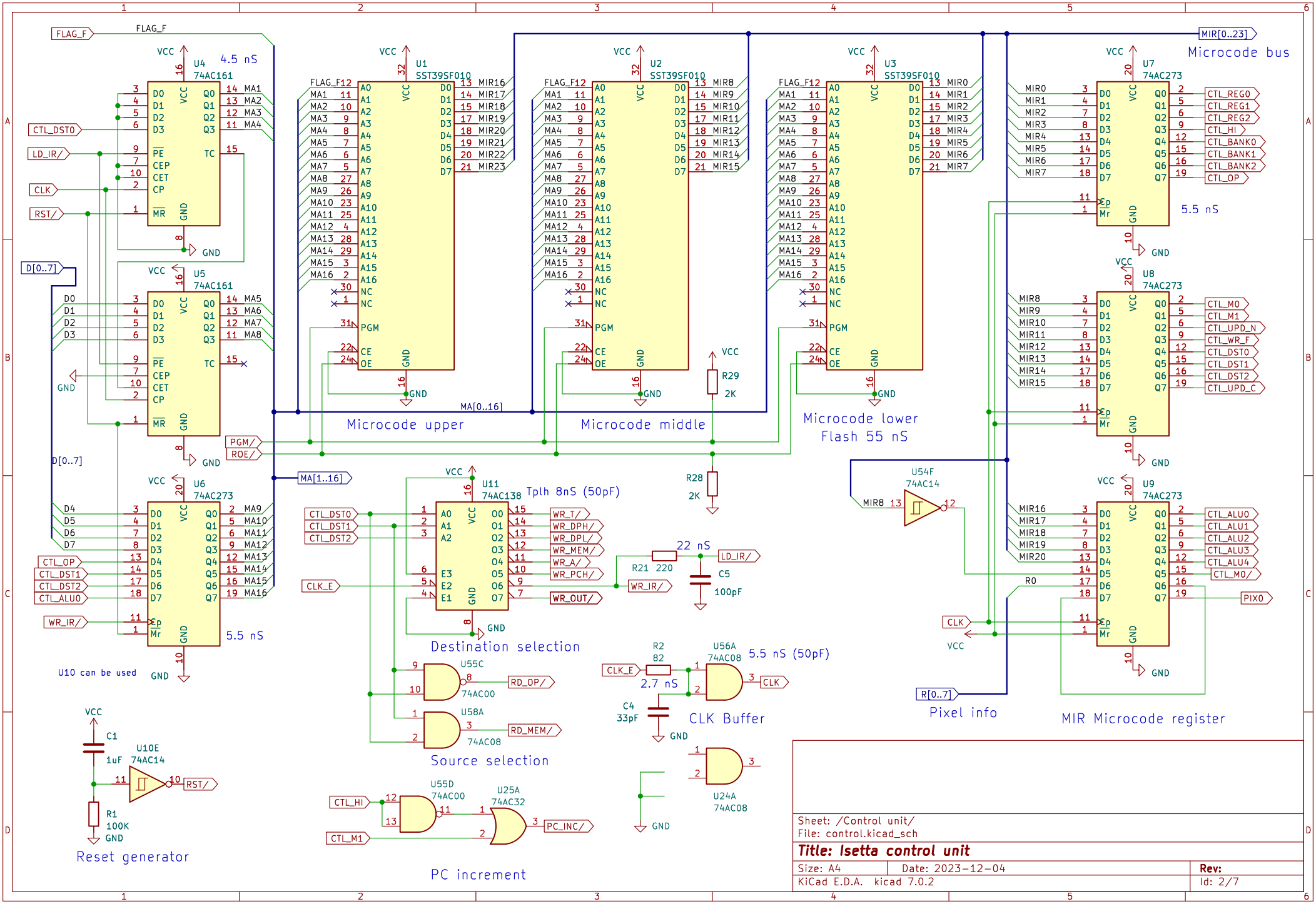
FLAG_F
U4
74AC161
4.5 nS
CTL_DST0
LD_IR/
CLK
RST/
D[0..7]
U5
74AC161
U6
74AC273
5.5 nS
U10 can be used
WR_IR/
CTL_OP
CTL_DST1
CTL_DST2
CTL_ALU0
U1
SST39SF010
U2
SST39SF010
U3
SST39SF010
Microcode upper
Microcode middle
Microcode lower
Flash 55 nS
MA[0..16]
MA[1..16]
PGM/
ROE/
R29
2K
R28
2K
MIR[0..23]
Microcode bus
U7
74AC273
U8
74AC273
U9
74AC273
5.5 nS
CTL_REG0
CTL_REG1
CTL_REG2
CTL_HI
CTL_BANK0
CTL_BANK1
CTL_BANK2
CTL_OP
CTL_M0
CTL_M1
CTL_UPD_N
CTL_WR_F
CTL_DST0
CTL_DST1
CTL_DST2
CTL_UPD_C
CTL_ALU0
CTL_ALU1
CTL_ALU2
CTL_ALU3
CTL_ALU4
CTL_M0/
PIX0
U54F
74AC14
R0
R[0..7]
Pixel info
MIR Microcode register
U11
74AC138
Tplh 8nS (50pF)
CTL_DST0
CTL_DST1
CTL_DST2
CLK_E
WR_T/
WR_DPH/
WR_DPL/
WR_MEM/
WR_A/
WR_PCH/
WR_OUT/
R21 220
22 nS
C5
100pF
Destination selection
U55C
74AC00
RD_OP/
U58A
74AC08
RD_MEM/
Source selection
R2
82
2.7 nS
C4
33pF
U56A
74AC08
5.5 nS (50pF)
CLK
CLK Buffer
U24A
74AC08
C1
1uF
U10E
74AC14
R1
100K
Reset generator
U55D
74AC00
U25A
74AC32
CTL_HI
CTL_M1
PC_INC/
PC increment
Sheet: /Control unit/
File: control.kicad_sch
Title: Isetta control unit
Size: A4
Date: 2023-12-04
Rev:
KiCad E.D.A. kicad 7.0.2
Id: 2/7

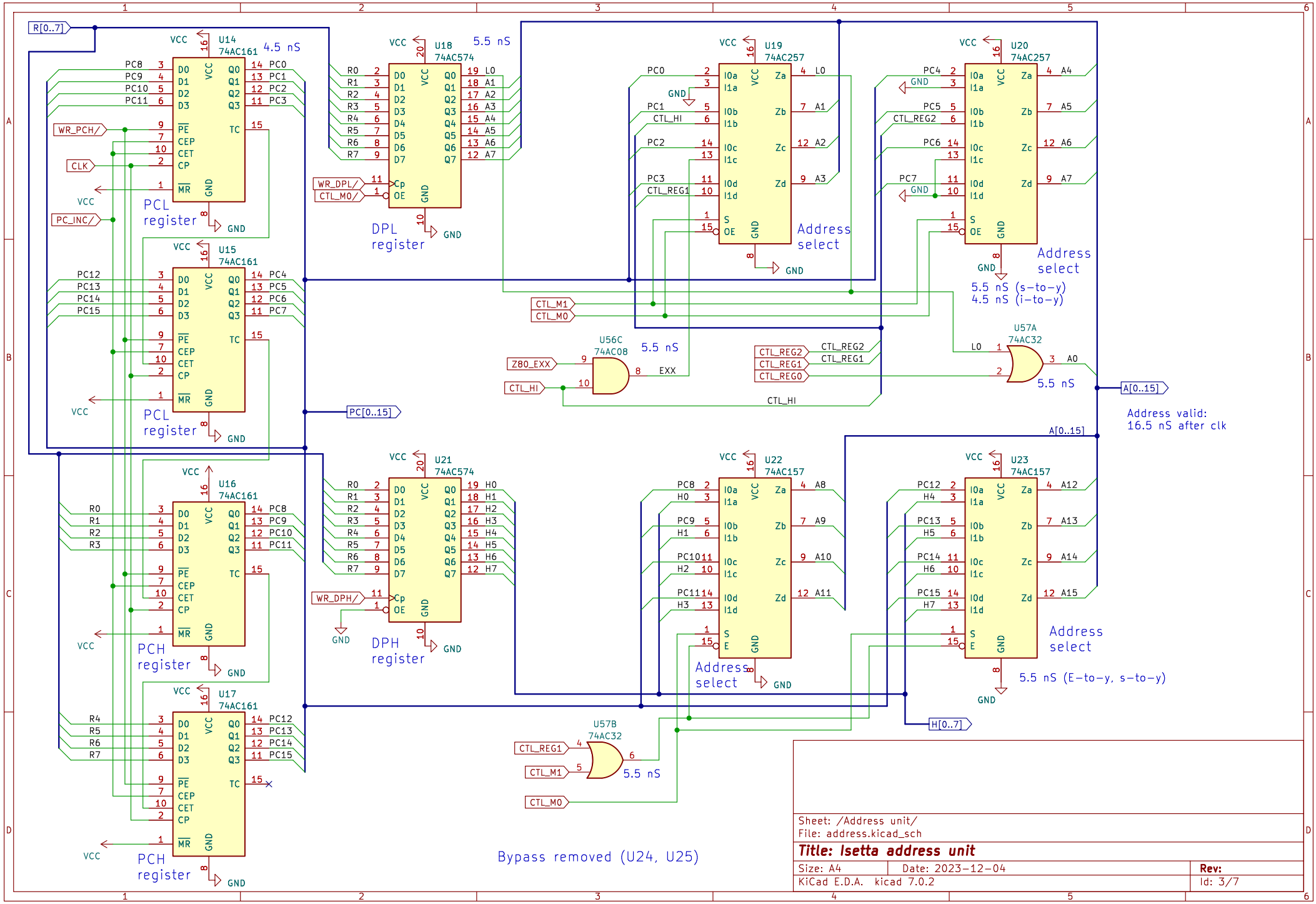
R[0..7]
U14
74AC161
4.5 nS
PCL register
U15
74AC161
PCL register
U16
74AC161
PCH register
U17
74AC161
PCH register
U18
74AC574
5.5 nS
DPL register
U19
74AC257
Address select
U20
74AC257
Address select
5.5 nS (s-to-y)
4.5 nS (i-to-y)
U56C
74AC08
5.5 nS
U57A
74AC32
5.5 nS
A[0..15]
Address valid:
16.5 nS after clk
PC[0..15]
U21
74AC574
DPH register
U22
74AC157
Address select
U23
74AC157
Address select
5.5 nS (E-to-y, s-to-y)
H[0..7]
U57B
74AC32
5.5 nS
Bypass removed (U24, U25)
Sheet: /Address unit/
File: address.kicad_sch
Title: Isetta address unit
Size: A4
Date: 2023-12-04
Rev:
KiCad E.D.A. kicad 7.0.2
Id: 3/7

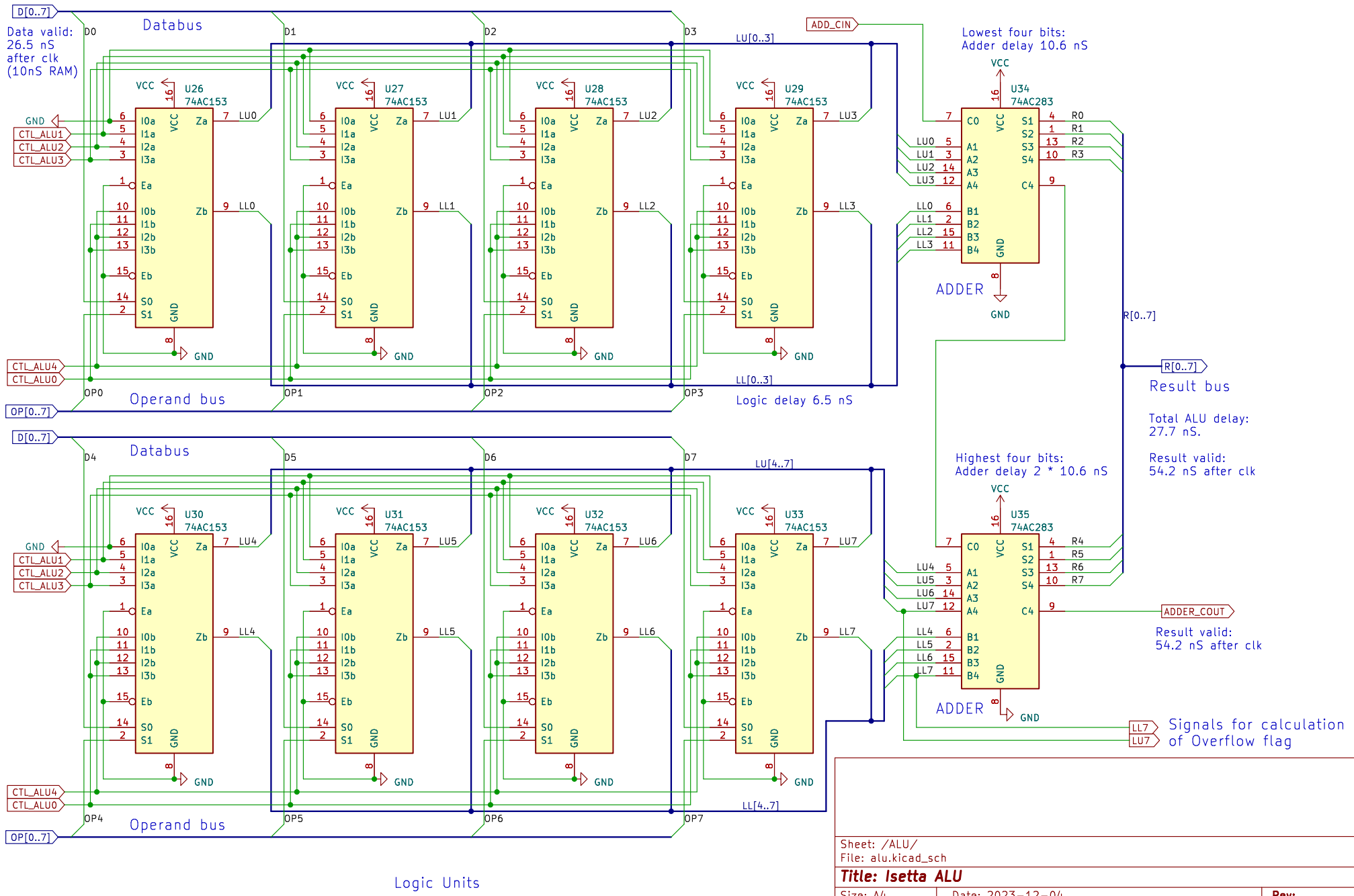

Sheet: /ALU/
File: alu.kicad_sch

Title: Isetta ALU

Size: A4	Date: 2023-12-04	Rev:
KiCad E.D.A. kicad 7.0.2		Id: 4/7

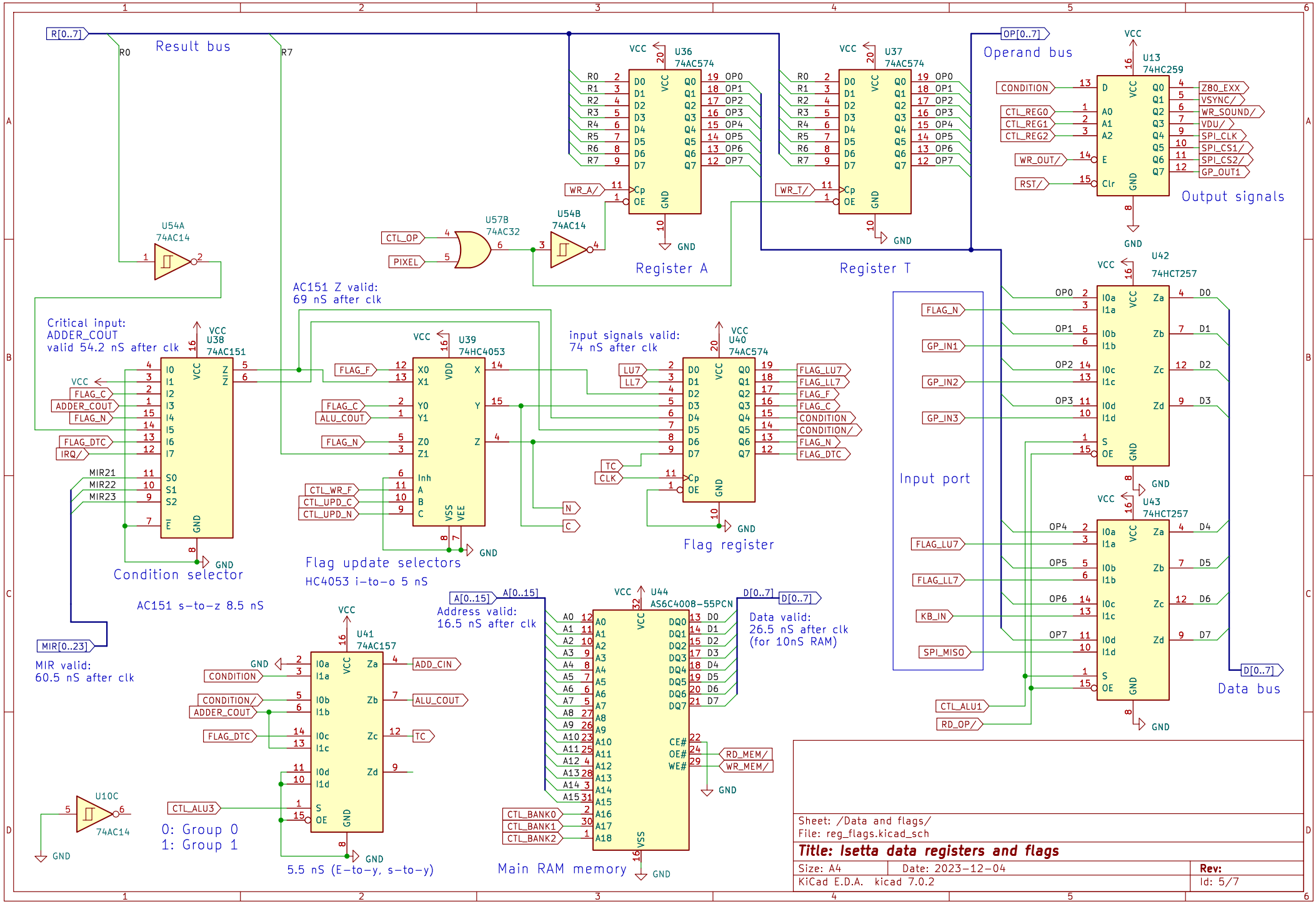
R[0..7]
Result bus
R0
R7
U36
74AC574
Register A
U37
74AC574
Register T
OP[0..7]
Operand bus
U13
74HC259
Output signals
U54A
74AC14
U57B
74AC32
U54B
74AC14
CTL_OP
PIXEL
WR_A/
WR_T/
AC151 Z valid:
69 nS after clk
Critical input:
ADDER_COUT
valid 54.2 nS after clk
U38
74AC151
Condition selector
AC151 s-to-z 8.5 nS
U39
74HC4053
Flag update selectors
HC4053 i-to-o 5 nS
input signals valid:
74 nS after clk
U40
74AC574
Flag register
U42
74HCT257
U43
74HCT257
Input port
Data bus
MIR[0..23]
MIR valid:
60.5 nS after clk
U41
74AC157
0: Group 0
1: Group 1
5.5 nS (E-to-y, s-to-y)
A[0..15]
Address valid:
16.5 nS after clk
U44
AS6C4008-55PCN
D[0..7]
Data valid:
26.5 nS after clk
(for 10nS RAM)
Main RAM memory
U10C
74AC14
Sheet: /Data and flags/
File: reg_flags.kicad_sch
Title: Isetta data registers and flags
Size: A4
Date: 2023-12-04
Rev:
KiCad E.D.A. kicad 7.0.2
Id: 5/7

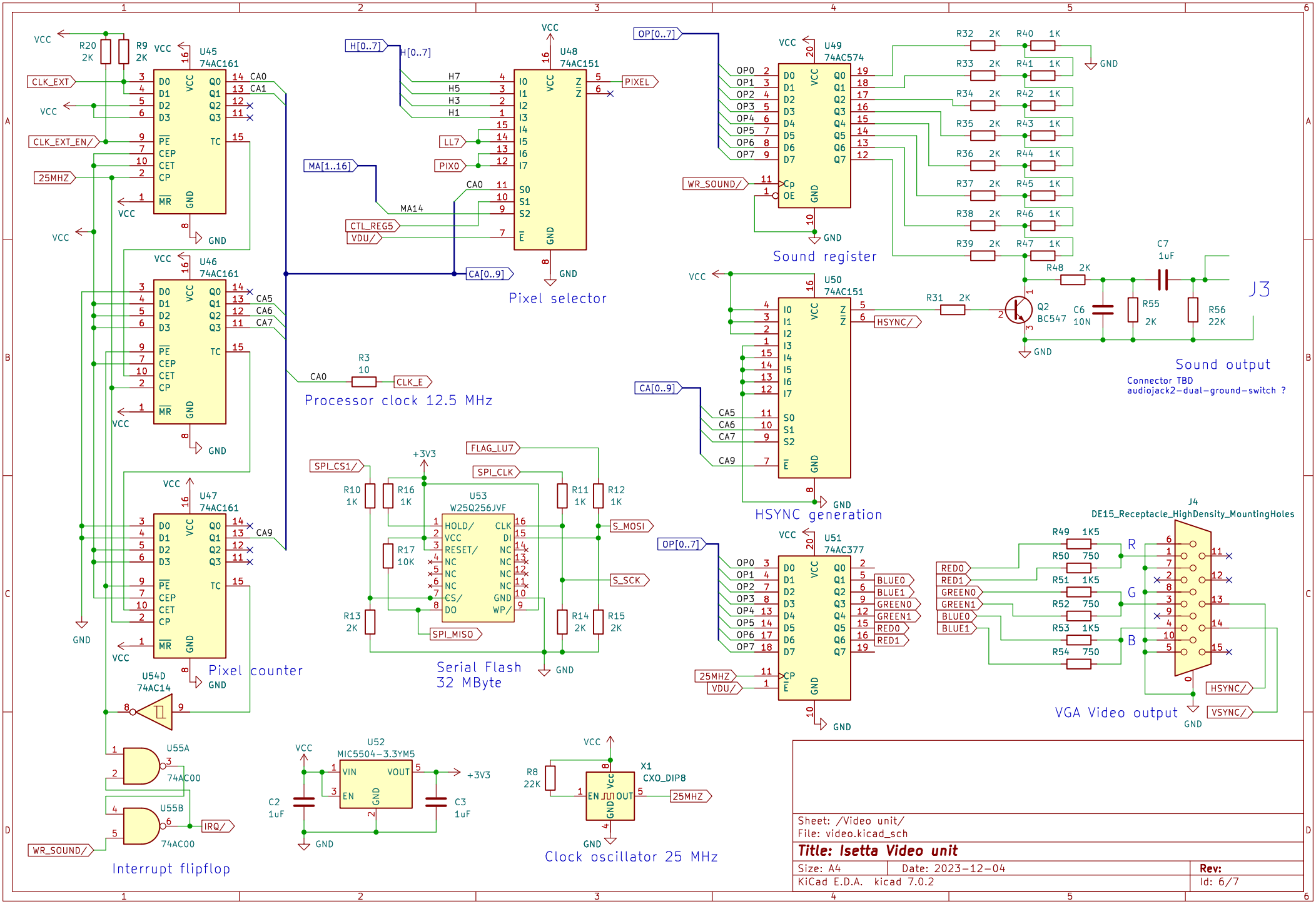
U45 74AC161
U46 74AC161
U47 74AC161
Pixel counter
U48 74AC151
Pixel selector
U49 74AC574
Sound register
U50 74AC151
HSYNC generation
U51 74AC377
Processor clock 12.5 MHz
U53 W25Q256JVF
Serial Flash 32 MByte
U54D 74AC14
U55A 74AC00
U55B 74AC00
Interrupt flipflop
U52 MIC5504-3.3YM5
X1 CXO_DIP8
Clock oscillator 25 MHz
Q2 BC547
J3
Sound output
Connector TBD
audiojack2-dual-ground-switch ?
J4 DE15_Receptacle_HighDensity_MountingHoles
VGA Video output
Sheet: /Video unit/
File: video.kicad_sch
Title: Isetta Video unit
Size: A4
Date: 2023-12-04
Rev:
KiCad E.D.A. kicad 7.0.2
Id: 6/7

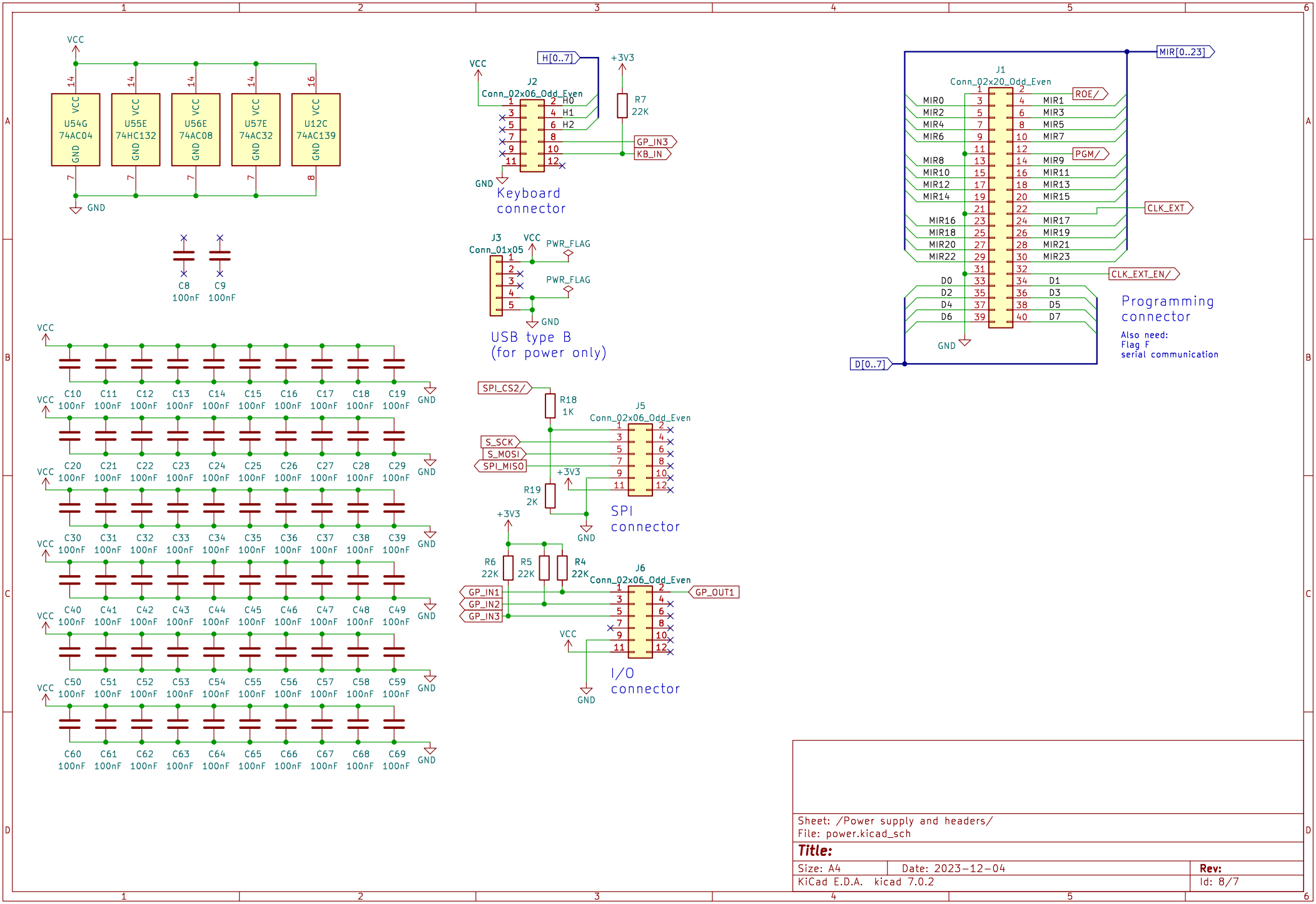

Sheet: /Power supply and headers/
File: power.kicad_sch

Title:

Size: A4	Date: 2023-12-04	Rev:
KiCad E.D.A. kicad 7.0.2		Id: 8/7